RF DIM/CCT/RGB/RGBW/RGB+CCT

TW1-4, TW2-4, TW4-4, TW5-4

Wall Mounted Touch Panel



TW1-4
4 Zone Dimming

TW2-4
4 Zone CCT

TW4-4
4 Zone RGB/RGBW

TW5-4
4 Zone RGB+CCT

FC CE RoHS

Features

- Touch panel 1-5 color 4 zone RF remote.
- Each touch panel can remote control multiple RF 2.4G LED controllers.
- Ultra sensitive high strength glass touch panel with touch color wheel in the middle.
- Touch keys with LED indicator.
- Free installation, no wiring, removable.
- CR2032 battery powered.
- White & Black available.

Technical Parameters

Input and Output	
Output signal	RF(2.4GHz)
Working voltage	3VDC(CR2032)
Working current	<8mA
Standby current	<16μA
Standby time	1 year
Remote distance	30m (Barrier-free space)

Environment	
Operation temperature	Ta: -20°C ~ +55°C
Case temperature (Max.)	Tc: +65°C
IP rating	IP20
Package	
Size	L100 x W92 x H16.5mm
Gross weight	0.137kg

Safety and EMC	
Safety standard	EN IEC 55015/ EN IEC 61547 ETSI EN 301 489-1/-3
EMC standard	EN 61347-1/-2 EN 62493
Radio Equipment	ETSI EN 300 440
Certication	CE RoHS FCC
Warranty	5 years

Mechanical Structures and Installations

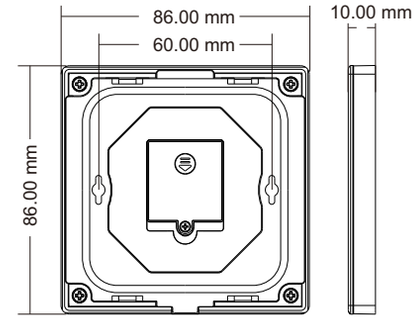

Installation diagram:

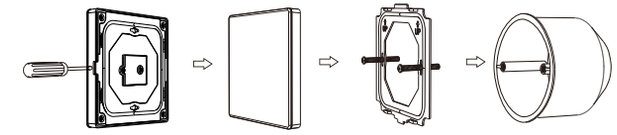

To fix the panel, three options are offered for selection:
Option 1. fix it on the wall with two screws.
Option 2. adhere it to the wall with paster.
Option 3. panel can be adsorbed directly onto metal surfaces.

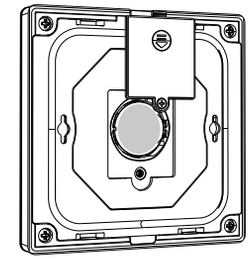

Note:
1. Before the first use, please remove the protective film on the battery.
2. Open the battery cover with a screwdriver.
3. If the LED indicator is not on when press key,
   it is due to dead battery or bad contact caused by multiple plugging,
   please replace the battery, or raise the battery shrapnel with a screwdriver

Match Remote Control (two match ways)

End user can choose the suitable match/delete ways. Two options are offered for selection:

Use the controller's Match key

Match:
Short press match key,
immediately press on/off key on the touch panel.
The LED indicator fast flash a few times means match is successful.

Delete:
Press and hold match key for 5s to delete all match.
The LED indicator fast flash a few times means all matched remotes were deleted.

Use Power Restart

Match:
Switch off the power, then switch on power, repeat again.
Immediately short press on/off key 3 times on the touch panel.
The light blinks 3 times means match is successful.

Delete:
Switch off the power, then switch on power, repeat again.
Immediately short press on/off key 5 times on the touch panel.
The light blinks 5 times means all matched remotes were deleted.

Key Function

• TW1-4 4 zone dimming panel



ALL — Turn on/off all zone light.

BRIGHT — Adjust brightness, 10 levels.

Touch to change brightness.

SCENE 1 SCENE 2 — Two scenes, short press recall the scene,
long press 5s to save the current state into scene1/2.

1 ZONE 2 ZONE 3 ZONE 4 ZONE — Short press turn on zone light and select zone simultaneously,
long press 2s turn off zone light.
Short press multiple zone key fastly, will select multiple zone synchronously.
4 zone control seperately or synchronously,
each zone could control multiple receivers.

Note:
The remote can be used as 4 zone dimming remote or single zone 4 channel dimming remote.

ALL + 4 ZONE : Long press 2s set as 4 channel dimming remote, only match with one or multiple receiver of 4 channel, such as V4 or C4 controller.

ALL + 1 ZONE : Long press 2s set as 4 zone dimming remote, each zone match with one or multiple receivers.

When set ok, the blue indicator will light on longer.

• TW2-4 4 zone CCT panel

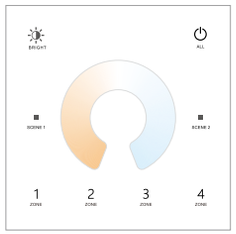

ALL — Turn on/off all zone light.

BRIGHT — Adjust brightness, 10 levels.

Touch to change color temperature.

SCENE 1 SCENE 2 — Two scenes, short press recall the scene,
long press 5s to save the current state into scene1/2.

1 ZONE 2 ZONE 3 ZONE 4 ZONE — Short press turn on zone light and select zone simultaneously,
long press 2s turn off zone light.
Short press multiple zone key fastly, will select multiple zone synchronously.
4 zone control seperately or synchronously,
each zone could control multiple receivers.

• TW4-4 4 zone RGB/RGBW panel

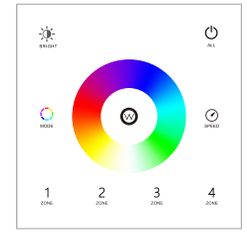

ALL — Turn on/off all zone light.

BRIGHT — Adjust brightness, 10 levels.

MODE — Short press run next dynamic mode, long press 2s run mode-cycle.

SPEED — For dynamic mode, adjust speed, short press 10 levels,
long press 2s get the default speed.
For static RGB color, adjust saturation,
short press 11 levels, long press 1-6s for continuous adjustment.

W — For RGB light, short press to get white (RGB mix).
For RGBW light, short press to get white (W channel),
long press 1-6s adjust W brightness.

Touch to change static RGB color.

1 ZONE 2 ZONE 3 ZONE 4 ZONE — Short press turn on zone light and select zone simultaneously,
long press 2s turn off zone light.
Short press multiple zone key fastly, will select multiple zone synchronously.
4 zone control seperately or synchronously,
each zone could control multiple receivers.

• TW5-4 4 zone RGB+CCT panel

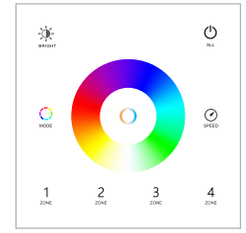

ALL — Turn on/off all zone light.

BRIGHT — Adjust brightness, 10 levels.

MODE — Short press run next dynamic mode, long press 2s run mode-cycle.

SPEED — For dynamic mode, adjust speed, short press 10 levels,
long press 2s get the default speed.
For static RGB color, adjust saturation, short press 11 levels,
long press 1-6s for continuous adjustment.

Adjust color temperature, 11 levels.

Touch to change static RGB color.

1 ZONE 2 ZONE 3 ZONE 4 ZONE — Short press turn on zone light and select zone simultaneously,
long press 2s turn off zone light.
Short press multiple zone key fastly, will select multiple zone synchronously.
4 zone control seperately or synchronously,
each zone could control multiple receivers.

TW5-4 Zone Light Type Setting

Each zone can match single color, dual color(WW/CW), RGB/RGBW or RGB+CCT(WW/CW) controller.

Long press any of 1 ZONE 2 ZONE 3 ZONE 4 ZONE key and any of four function key 2 seconds, will change one zone light type.

Long press any of ALL key and any of four function key 2 seconds, will change all four zone light type at the same time.

1 ZONE 2 ZONE 3 ZONE 4 ZONE + BRIGHT : Long press 2 seconds, set 1, 2, 3 or 4 zone as single color type.

1 ZONE 2 ZONE 3 ZONE 4 ZONE + : Long press 2 seconds, set 1, 2, 3 or 4 zone as dual color type.

1 ZONE 2 ZONE 3 ZONE 4 ZONE + MODE : Long press 2 seconds, set 1, 2, 3 or 4 zone as RGB/RGBW color type.

1 ZONE 2 ZONE 3 ZONE 4 ZONE + SPEED : Long press 2 seconds, set 1, 2, 3 or 4 zone as RGB+CCT type.

ALL + BRIGHT : Long press 2 seconds, set all 4 zone as single color type.

ALL + : Long press 2 seconds, set all 4 zone as dual color type.

ALL + MODE : Long press 2 seconds, set all 4 zone as RGB/RGBW color type.

ALL + SPEED : Long press 2 seconds, set all 4 zone as RGB+CCT type.

For example, If you want to change zone 1 light type as RGB type, please long press 1 ZONE and MODE key 2 seconds, When set is OK, the LED indicator will lighten red and blue.

TW1-4 and TW2-4 Scene Locking

- Scene keys can be set to locked state, cancel long press for 5 seconds to save the scene function (default scene is not locked).
- Short press the panel on/off key, turn on the light first, then turn off the light, immediately long press the panel on/off key for 5 seconds, then immediately long press any one scene key for 5 seconds to set all scene keys to locked state.
- Short press the panel on/off key, turn on the light first, then turn off the light, immediately long press the panel on/off key for 5 seconds, then immediately long press any one scene key for 10 seconds to restore all scene keys to unlocked state.

Statement

FCC ID Statement:
Mobile
RF Exposure Information
This equipment complies with FCC radiation exposure limits set forth for an uncontrolled environment.
This equipment should be installed and operated with minimum distance 20cm between the radiator and your body.
IC ID Statement:
Mobile
This equipment should be installed and operated with minimum distance 20cm between the radiator & your body.
Cet équipement doit être installé et utilisé à une distance minimale de 20 cm entre le radiateur et votre corps.

Safety Information

1. Read all instructions carefully before you begin this installation.
2. When installing battery, pay attention to the battery positive and negative polarity.
   A long time without the remote control, remove the battery.
   When remote distance becomes smaller and insensitive, replace the battery.
3. If no response from the receiver, please re-match the remote.
4. Gently handle remote, beware of falling.
5. For indoor and dry location use only.
6. Remove and immediately recycle or dispose of used batteries according to local regulations and keep away from children.
   Do NOT dispose of batteries in household trash or incinerate.
7. Even used batteries may cause severe injury or death.
8. Call a local poison control center for treatment information.
9. Compatible battery type is CR2032 and the nominal battery voltage is 3V.
10. Non-rechargeable batteries are not to be recharged.
11. Do not force discharge, recharge, disassemble, heat above 55℃ or incinerate.
    Doing so may result in injury due to venting,leakage or explosion resulting in chemical burns.
12. Ensure the batteries are installed correctly according to polarity (+ and -).
13. Do not mix old and new batteries, different brands or types of batteries, such as alkaline, carbon-zinc, or rechargeable batteries.
14. Remove and immediately recycle or dispose of batteries from equipment not used for an extended period of time according to local regulations.
15. Always completely secure the battery compartment. If the battery compartment does not close securely, stop using the product, remove the batteries, and keep them away from children.

⚠ WARNING

- **INGESTION HAZARD:**
  This product contains a button cell or coin battery.



- **DEATH** or serious injury can occur if ingested.
- A swallowed button cell or coin battery can cause **Internal Chemical Burns** in as little as **2 hours.**
- **Keep** new and used batteries **OUT OF REACH of CHILDREN**
- **Seek immediate medical attention** if a battery is suspected to be swallowed or inserted inside any part of the body.