V1-SP

RF DIM

RF Dimming LED Controller

- Mini RF dimming single channel constant voltage LED controller.
- Match with RF 2.4G single-zone or multi-zone dimming remote controller optional.
- One RF controller accept up to 10 remote control.
- 4096 levels 0-100% dimming smoothly without any flash.
- Logarithmic or linear dimming curves are available.
- 500Hz, 2KHz, 8KHz or 16KHz output PWM frequency selectable.
- Connect with external push switch to achieve on/off, and brightness 0-100% adjustment function.
- Overheat/reverse/short circuit protection.
- 3s on/off fade can be set.

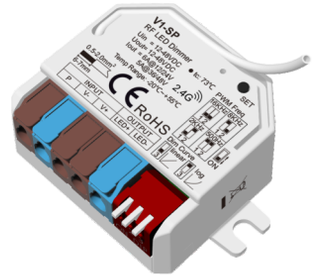

CE RoHS

Technical Parameters

Input and Output	
Input voltage	12-48VDC
Output voltage	12-48VDC
Output current	6A@12/24V 5A@36/48V
Output power	72W@12V 144W@24V 180W@36V 240W@48V

Environment	
Operation temperature	Ta: -20°C ~ +55°C
Case temperature (Max.)	Tc: +73°C
IP rating	IP20

Dimming data	
Input signal	RF 2.4GHz + Push-DIM
Control distance	30m(Barrier-free space)
Dimming gray scale	4096 (2^12)levels
Dimming range	0 -100%
Dimming curve	Linear/Logarithmic(default)
PWM frequency	500Hz/2KHz(default)/ 8KHz/16KHz

Warranty and Protection	
Warranty	5 years
Protection	Anti-reverse, overheat short circuit

Safety and EMC	
EMC standard	EN IEC 55015/ EN IEC 61547 ETSI EN 301 489-1/-3
Safety standard	EN 61347-1/-2
Radio equipment	ETSI EN 300 440
Certification	CE RoHS

Package	
Size	L60 x W60 x H40mm
Gross weight	0.043kg

Mechanical Structures and Installations

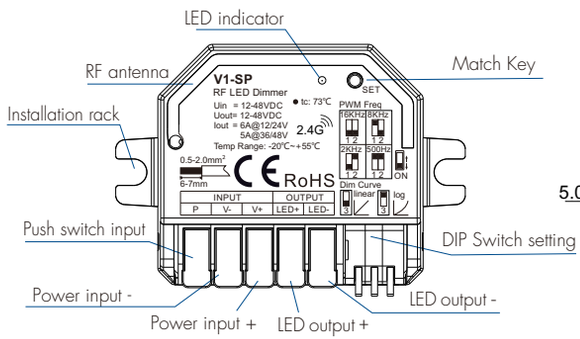

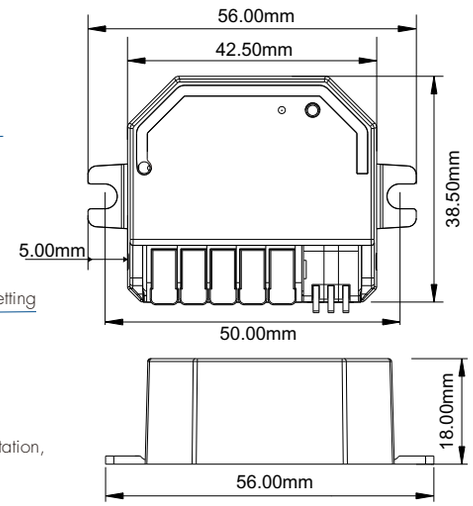

Note: The mounting ear on both sides can be broken along the indentation, to suit different mounting needs.

Wiring Diagram

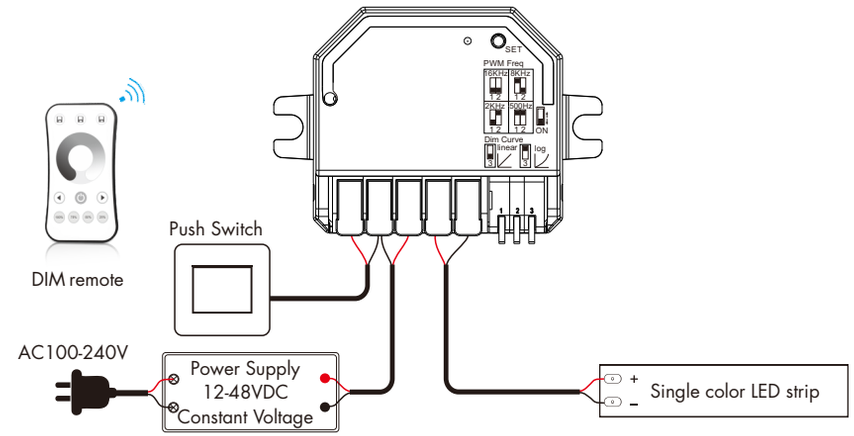

Wire preparation:

1. The wiring can be solid or stranded with a cross-sectional area of 0.5 to 2.0 mm².
   Conventional 1mm² can withstand 10A output current.
2. When wiring is installed, the terminals must be tightened. If they are not tightened, the contact point resistance will be too high and the terminals will easily burn due to heat when used at full load for a long time.

Note: The output power of a constant voltage power supply should be at least 1.2 times that of the output load (LED strip), otherwise the full power output of the load can easily cause automatic flickering or shaking of the light.

Match with RF Remote Control

There are two ways to match/delete:

Use match key

Match:
Short press match key, enter the match state.
immediately press on/off key (single zone remote)
or zone key (multiple zone remote) of the remote,
The LED indicator fast flash means match is successful.

Delete:
Press and hold match key for 5s to delete all match,
The LED indicator fast flash means all matched remotes were deleted.

Use Power Restart

Match:
Switch off the power, then switch on power, repeat again.
Immediately short press on/off key (single zone remote)
or zone key (multiple zone remote) 3 times on the remote.
The output light flashes 3 times means match is successful.

Delete:
Switch off the power, then switch on power, repeat again.
Immediately short press on/off key (single zone remote)
or zone key (multiple zone remote) 5 times on the remote.
The output light flashes 5 times means all matched remotes were deleted.

Push Switch Dimming

The push switch interface can be connected to push panel switch or push button for dimming.

- **Short press:** Turn the light on or off.
- **Double-click:** Switch between 10% and 100% brightness.
- **Long press (1-6s):** Continuously increase or decrease the brightness,
  long press again after each release, the brightness changes in the opposite direction.
- **Dimming memory:** The brightness value has been set by long-pressing Push, with power-down memory.
- **Synchronize:** If multiple controllers are connected to the same self-reset switch,
  please long press for 10s first to synchronize all lights to 100% brightness.
  It is recommended that the number of controllers connected to the same push switch does not exceed 25,
  and the length of the connecting wire does not exceed 20m.

PWM Frequency Setting

Four PWM frequencies can be selected: 500Hz, 2KHz, 8KHz or 16KHz.
Higher PWM frequency will result in lower output current, higher power supply noise, more suitable for camera shooting (video without flicker).

Dimming Curve Setting

Linear Dimming Curve

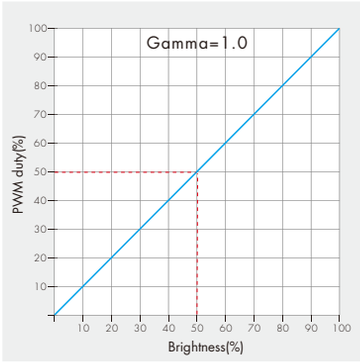

Logarithmic Dimming Curves

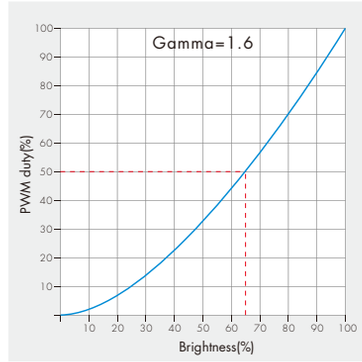

On/Off Fade Time Setting

Press and hold the match key for 10s to restore the default parameters, factory default parameters: light on/off fade time is 0.5s.
Press and hold the match key for 15s, the light on/off fade time is set to 3s.

Installation Precautions

1. The products shall not be stacked, the distance should be ≥ 20cm, so as not to affect lifespan of the products due to poor heat dissipation.
2. The product shall not be installed close to the switching power supply with an interval of ≥ 20cm to avoid radiation interference of the switching power supply.
3. The installation height shall be ≥ 1m from the floor to avoid shortening remote control distance due to too weak reception signal.
4. The products are not allowed to be close to or covered by metal objects, with an interval of ≥ 20cm to avoid signal attenuation and shorten the remote distance.
5. Avoid installation at the corner of the wall or the corner of the beam, with an interval of ≥ 20cm to avoid signal interference.